Orizon

Mounting instructions

1

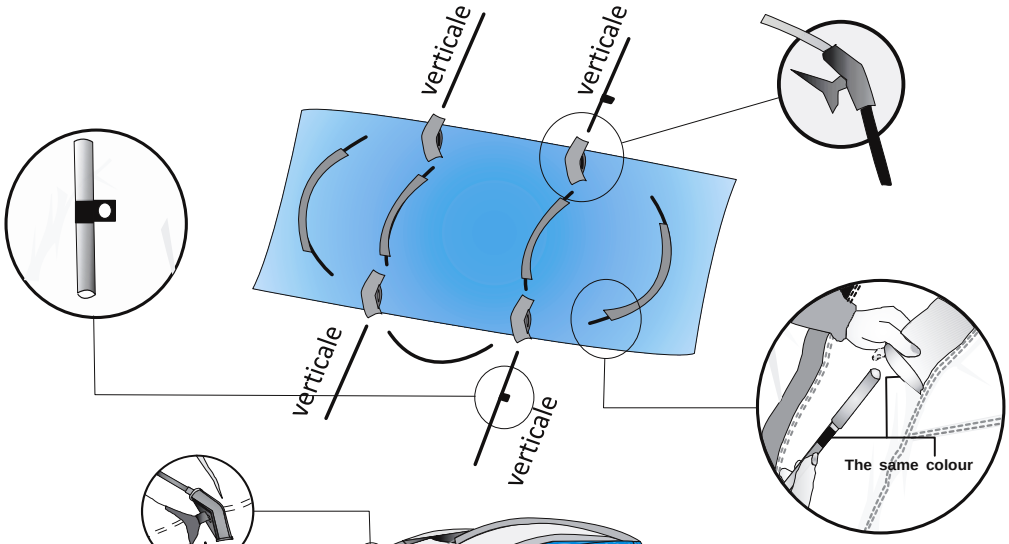

2

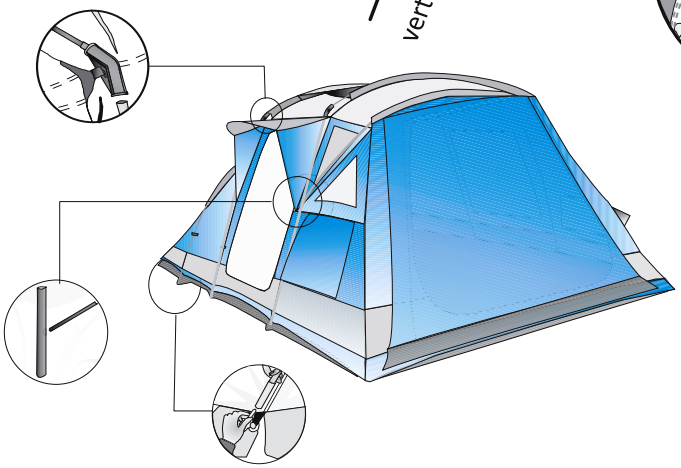

3

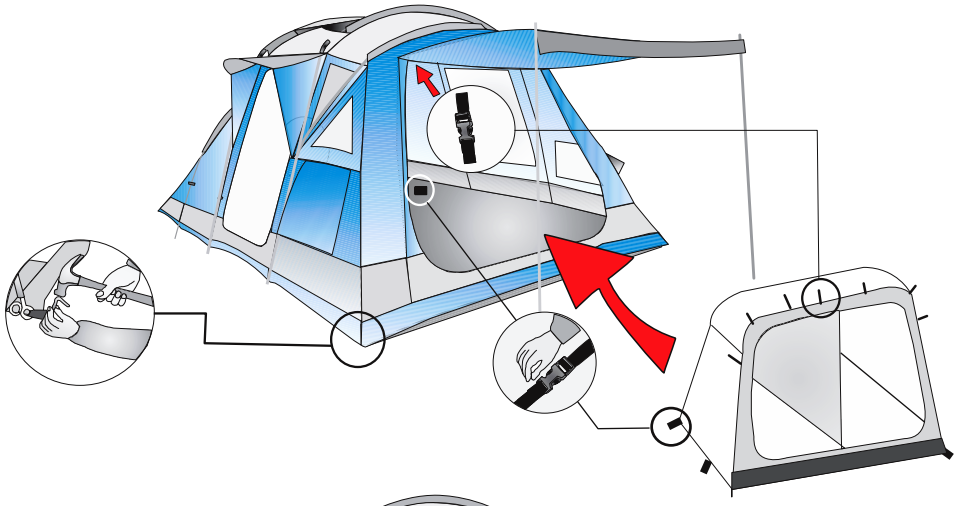
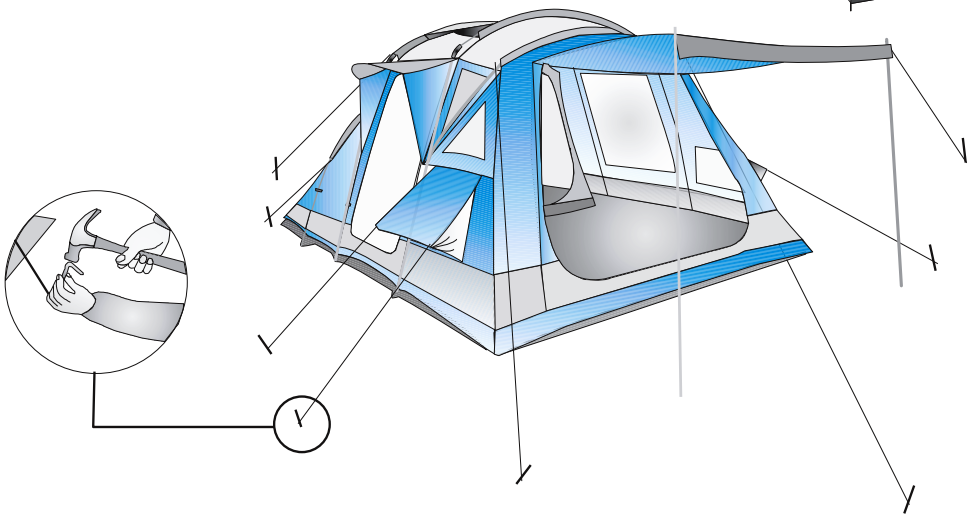
4