ULTRA-BOX 1 02083-01-
ULTRA-BOX 2 02084-01-
ULTRA-BOX 3 02085-01-

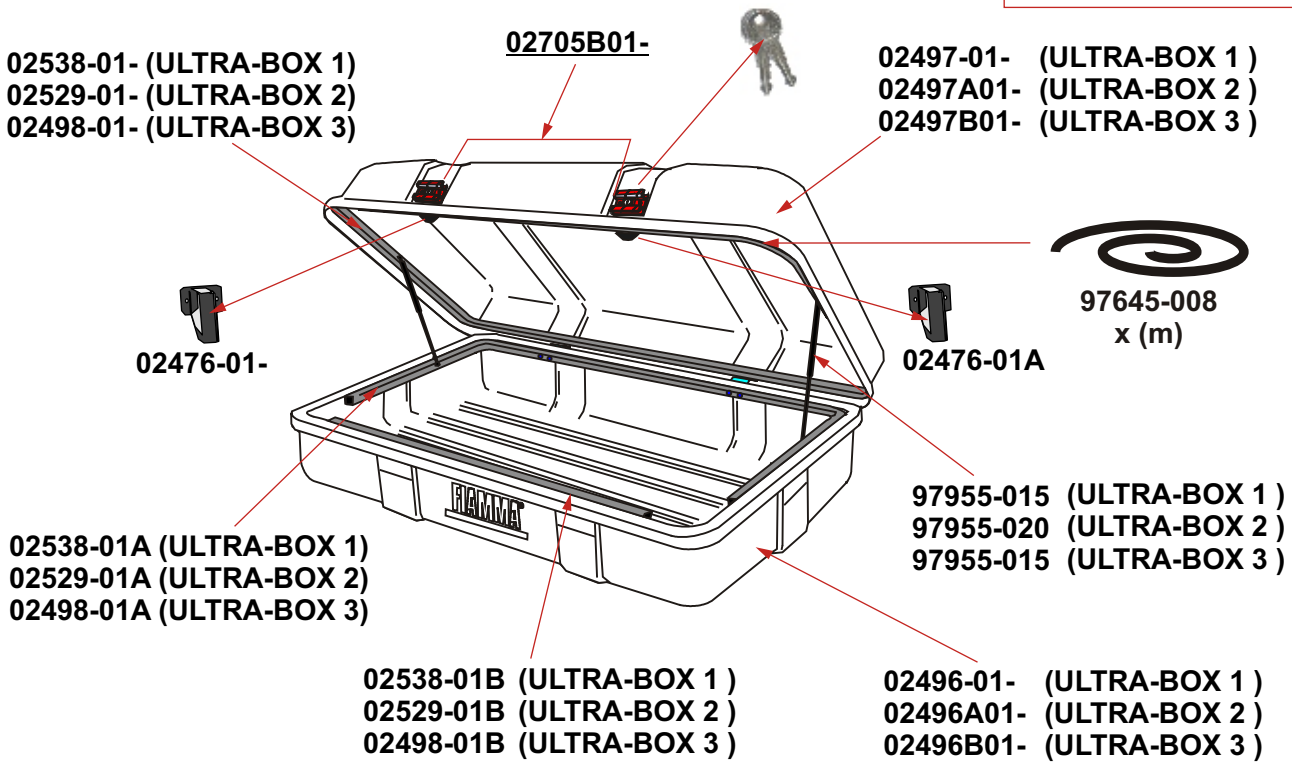

FIAMMA ULTRA-BOX
JANUARY 2001
Rel. 1.0

SPORT 02084A01-
JUMBO SKI 02418-01-

SPORT

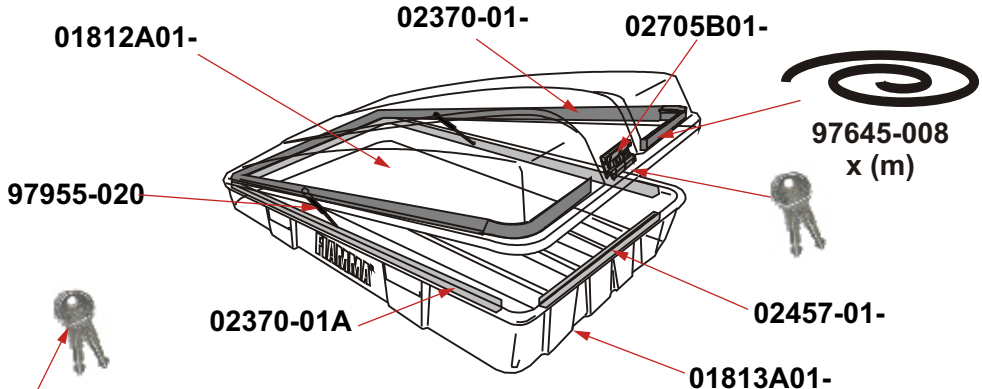
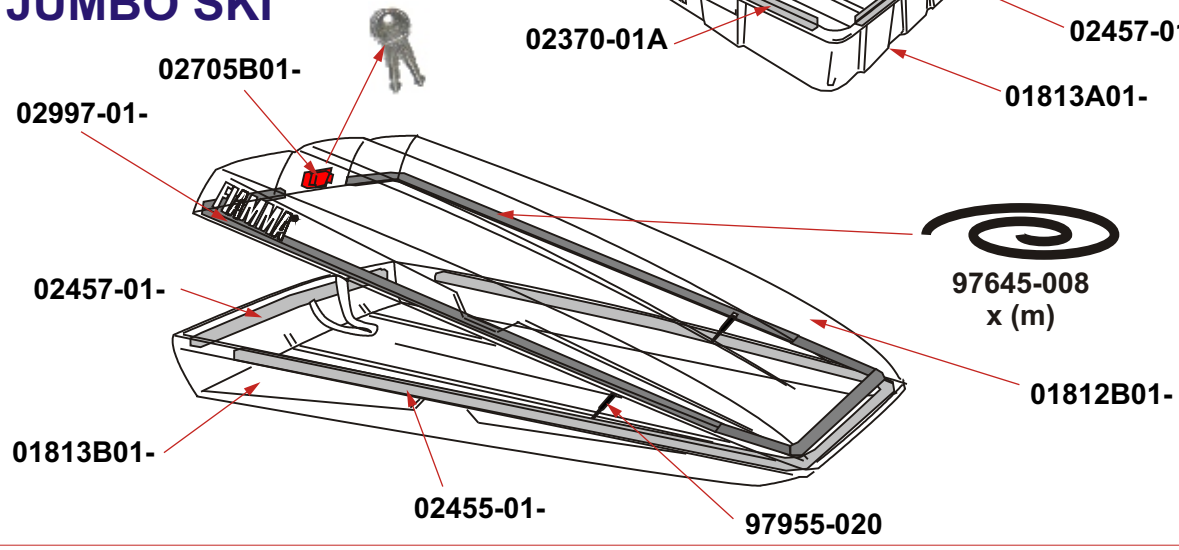
JUMBO SKI